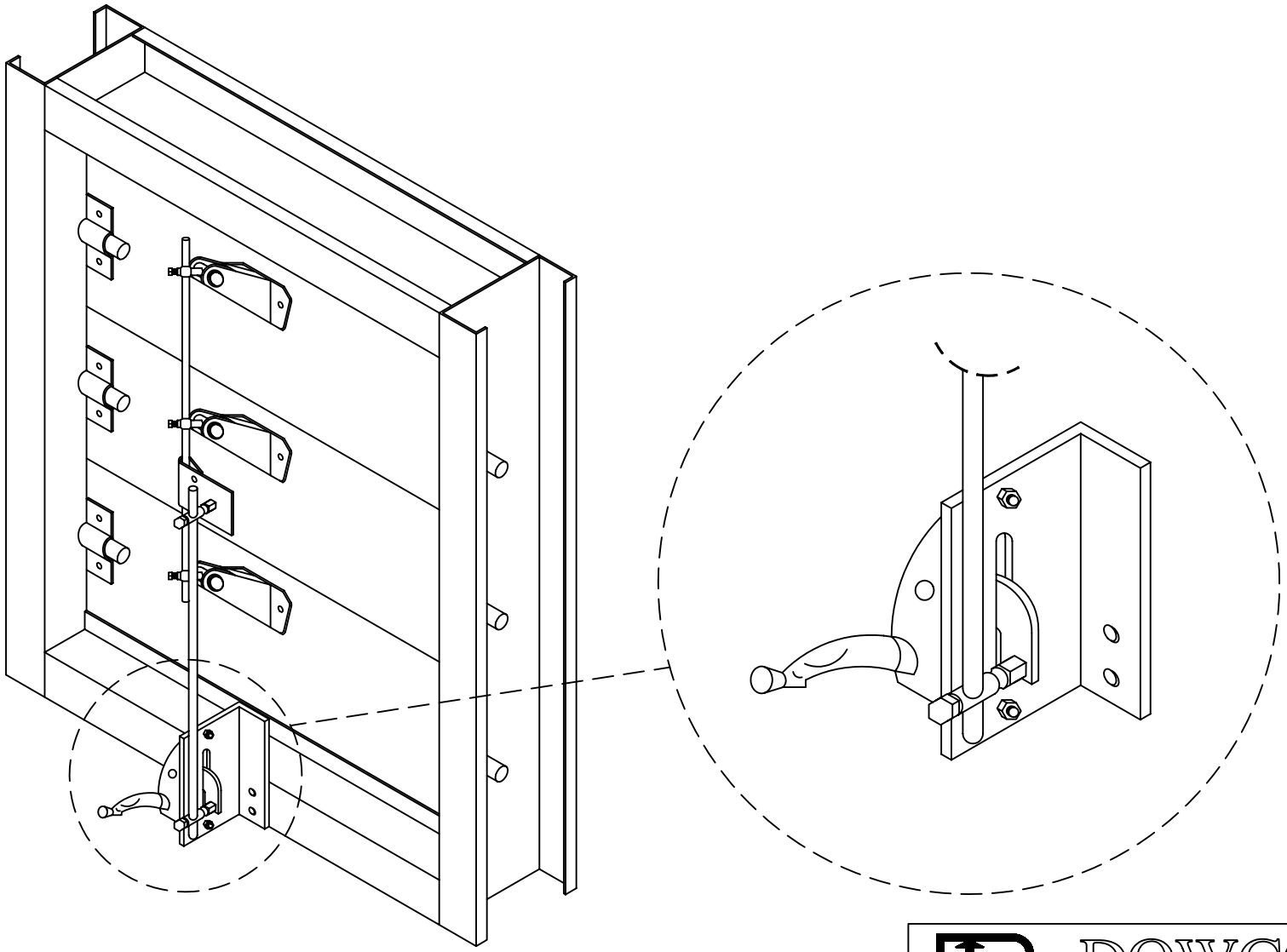

CRANK OPERATOR

DOWCO DEPENDABLE PRODUCTS SINCE 1955

1855 SOUTH 54TH AVENUE, CICERO, IL. 60650

REV.	DESCRIPTION	DATE	BY

ARCH/ENGR:

CUSTOMER:

PROJECT:

TITLE:

DATE:

DRAWN:

CHKD:

DRWG #: